CANDELA

Candela Laser Corporation

# ALEXLAZR System

# Operator's Manual

Candela Laser Corporation
530 Boston Post Road
Wayland, MA 01778-1886
Telephone (508) 358-7637
Toll Free (800) 733-8550 (Technical Assistance)
Toll Free (800) 73-LASER (Customer Service)

P/N 8501-00-0990, Revision 04
September, 1995

# PART ONE

# ALEXLAZR OPERATOR'S MANUAL

8501-00-1090, Revision A

**Configuration Sheet**

**ALEX*LAZR* Service Manual**

**Revision A**

This ALEX*LAZR* Service Manual consists of the following:

| *Part number* | *Description* | *Revision* |
|---|---|---|
| 8501-00-0990 | Operator's Manual | 04 |
| 8501-00-1120 | Theory of Operation | A |
| 8501-01-1090 | Text, Service Procedures | A |
| 1010-01-0780 | Firmware Design Specification | B1 |
| 1010-06-0780 | Firmware Requirements Specification | B1 |
| 8501-02-1090 | Engineering Drawing Package | A |

# TABLE OF CONTENTS

## TABLE OF FIGURES

CANDELA

# SECTION ONE

# INTRODUCTION

Section One is a brief introduction to the Candela ALEXLAZR system. This section provides information on the application for which the system was designed, and a brief description of the laser system's major components and their function.

## 1.1 LASER TREATMENT OF SKIN PIGMENTATION ABNORMALITIES

The Candela ALEXLAZR system is a flashlamp excited, Q-switched alexandrite laser designed for the treatment of tattoos, Nevus of Ota and lesions like Nevus of Ota. Blue, green and black pigments respond best to treatment, whereas other pigments show more variable response and test spots are recommended.

With the 755 nm nominal wavelength, laser irradiation is selectively absorbed by the targeted pigment with minimal effect on the surrounding tissue. This is accomplished by careful selection of the wavelength that yields maximum absorption by the target and minimum absorption by surrounding skin structures. In addition, the laser pulse duration is controlled to be equal to or shorter than the thermal relaxation time of the target, to minimize heat transfer to surrounding tissues. This principle was first described by Anderson and Parrish.*

* For references, see Appendix B.

Tattoo pigments vary in composition depending on the color of the tattoo and its origin (amateur, professional, or traumatic). Ideally, the wavelength selected for eradication of the tattoo should be highly absorbed by the tattoo pigment and only minimally absorbed by other chromophores in the skin. Absorption of radiation by most pigments in amateur and professional tattoos is strong in the near-infrared region of the spectrum. Melanin has a very broad absorption band throughout the ultra-violet, visible, and near-infrared regions of the spectrum, with absorption of light greatest in the ultraviolet, and least in the near-infrared. Other chromophores in the skin, such as hemoglobin and oxyhemoglobin, have little to no absorption of light within the selected wavelength.

The 755 nm nominal wavelength of the ALEXLAZR has been carefully selected to utilize the difference in absorption for the treatment of dark tattoo pigments. Treatment of tattoos can therefore be performed with minimal adverse effects on normal skin structures.

The laser pulse duration should be shorter than the thermal relaxation time of the target absorbing the laser radiation to confine the thermal damage and spare surrounding skin structures. The relaxation time of a target is determined by its size. In the case of tattoos, the targets are the solid pigment particles of the tattoo inks or dyes. The thermal relaxation time of these micron size absorbers is approximately one microsecond (Margolis, et al), and, according to selective photothermolysis theory, pulse durations as long as several hundred nanoseconds should be effective. However, experiments show that a greater effect is obtained by fragmenting the absorber into smaller particles so that phagocytes can more effectively dispose of the fragmented particulates after laser exposure. This fragmentation is accomplished by using pulse durations shorter than the upper limit predicted by selective photothermolysis theory. The shorter pulses instantaneously raise the temperature of pigmented structures to a very high level and cause fragmentation and further decomposition, a desirable effect in the treatment of tattoos.

The wavelength and pulse duration considerations outlined above indicate that the ALEXLAZR is appropriate for treatment of tattoos. The wavelength of the ALEXLAZR is about 755 nm, in the near-infrared region. It produces pulses approximately 50 nanoseconds in duration. The pulse energies it produces allows delivery of energies up to 625 mJ. Because the wavelength and pulse duration of the Candela ALEXLAZR are closely controlled, treatment of tattoos can be achieved with minimal energy densities, reducing the possibility of adverse effects on adjacent normal skin structures.

## 1.2 SYSTEM DESCRIPTION

The ALEXLAZR consists of an alexandrite laser head, a Q-switching mechanism, a power supply and a deionized water circulator. The laser head contains the cavity mirrors, Pockels cell, solid state laser medium (the alexandrite rod), and two high intensity xenon flashlamps which excite the laser medium. A calibration port with an internal meter is located on the control panel, which is used to verify the transmission of the optical fiber and handpiece, and to calibrate the output of the handpiece at selected fluence levels. The temperature of the laser head is regulated by the circulation of distilled water at a controlled temperature.

To provide energy to the flashlamps, a high voltage power supply charges a storage capacitor; a trigger pulse applied to the gate pins of four SCRs (high voltage switches) causes the capacitor to discharge through the flashlamp. The resulting flash excites the alexandrite rod, causing the emission of a pulse of laser energy. A low voltage is supplied to the flashlamps to maintain ionization in the tubes. This "simmer" ionization is not sufficient to produce the optical gain required for laser output, but it improves the response time of flashlamps and extends their life.

A microprocessor based system controller is used to monitor and direct all system functions. Users of the laser select parameters and monitor operation via electronic controls and a display panel. A computer terminal gives the service technician access to the system controller, both to obtain information and to control system functions, for maintenance and for troubleshooting.

The ALEXLAZR system delivers laser energy at a wavelength of about 755 nm with a nominal pulsewidth of 50 nanoseconds. The output of this laser is delivered to the area of treatment by means of a lens coupled user replaceable optical fiber with a treatment handpiece attached to its distal end. A trigger switch (footswitch) is used to control the delivery of pulses. The user may choose to deliver a single pulse each time the trigger switch is depressed, or pulses may be delivered repetitively as long as the switch is depressed, at repetition rates up to 5 pulses per second.

The ALEXLAZR control panel enables the user to select the desired energy density (fluence) level and repetition rate. The control panel is also used to enable or disable the triggering of the laser, to initiate the calibration feature and to obtain feedback from the system, such as the number of pulses delivered or spot size selected.

Under CDRH regulations, this laser system is classified as a Class IV laser. Under IEC regulations, this laser system is classified as a Class 1 medical device (type B), and as a Class 4 laser.

The laser system is equipped with interlocks that turn off the high voltage power supply if the remote (CDRH) interlock circuit is open, or if the fiber is removed.

## 1.3 SYSTEM SPECIFICATIONS

| | |
|---|---|
| Laser Type: | Flashlamp-excited, Q-switched 1/4" alexandrite laser rod |
| Wavelength: | 755 nm ± 15 nm |
| Q-Switch: | Electro-optical switch (Pockels cell) |
| Method of Optical Output: | Lens coupled user replaceable optical fiber light guide with snap-on handpiece |
| Beam Output Mode: | Multimode |
| Maximum Delivered Energy: | 625 mJ |
| Pulse Repetition Rate: | Single pulse; repetitive pulsing at 1, 2, & 5 Hz |
| Pulse Duration: | 50 nanoseconds (nominal) |
| Beam Spot Sizes: | 2, 3, and 4 mm diameter |
| Cooling Method: | Ambient air |
| Stability of Output Energy: | ±14% |
| Electrical Requirements: | 200/208/230 VAC ± 10%, 50/60 Hz, single phase<br>13 A maximum at 230 VAC<br>20 A service recommended |

# SECTION TWO

# SAFETY

Section Two discusses the optical, electrical, mechanical, and chemical hazards potentially associated with the ALEX*LAZR* and the precautions to be taken to avoid these hazards.

## 2.1 INTRODUCTION

---

**WARNING**

**THE ELECTRICAL AND LASER RADIATION HAZARDS PRESENT DURING SERVICING OF THE ALEX*LAZR* CAN BE EXTREMELY DANGEROUS IF PROPER SAFETY PRECAUTIONS ARE NOT TAKEN. CONSEQUENTLY, THE ALEX*LAZR* IS TO BE SERVICED ONLY BY THOSE QUALIFIED TECHNICIANS WHO HAVE RECEIVED APPROPRIATE TRAINING ON THE ALEX*LAZR* FROM CANDELA, AND WHO ARE FAMILIAR WITH THE SAFETY CONSIDERATIONS DISCUSSED IN THIS SECTION.**

---

The ALEX*LAZR* system has been designed for the safest possible operation and maintenance. However, any laser system can cause injury if it is not properly installed, operated, moved or serviced, and the ALEX*LAZR* is no exception. The potential hazards associated with the ALEX*LAZR* are: ocular (vision) damage resulting from exposure to direct or reflected laser radiation, electrical shock from contact with electrical components inside the system, and physical injury incurred while moving the system.

To avoid these hazards, the precautions discussed in this section must be observed when installing, operating, moving or servicing the system.

## 2.2 OPTICAL HAZARDS

---

**WARNING**

**LIGHT ENERGY EMITTED BY THE ALEXLAZR LIES IN THE INVISIBLE, NEAR-INFRARED REGION OF THE ELECTROMAGNETIC SPECTRUM.**

**USE ONLY SAFETY EYEWEAR THAT IS KNOWN TO HAVE AN OPTICAL DENSITY OF 7.0 OR MORE AT 755 NM ± 15 NM, THE WAVELENGTH EMITTED BY THIS LASER SYSTEM. SAFETY EYEWEAR THAT IS DESIGNED FOR USE WITH OTHER LASER SYSTEMS MAY NOT PROVIDE ADEQUATE PROTECTION.**

---

The laser aperture of the ALEXLAZR is the distal end of the handpiece.

The laser beam emitted by this laser is capable of causing loss of vision. Light energy emitted by the ALEXLAZR lies in the invisible, near-infrared region of the electromagnetic spectrum. This fact should be remembered when taking precautions to avoid inadvertent exposure. The cornea and lens of the eye are transparent to the invisible 755 nm wavelengths emitted from this laser, and therefore will focus the beam directly onto the retina. Such direct impingement of the laser beam on the retina can result in temporarily clouded vision, retinal lesions, long-term scotoma (vision absence in an isolated area), and long-term photophobia (sensitivity to light).

To avoid vision hazards, everyone in the area where the laser system is operating, including during service procedures, must wear appropriate eye protection. Such eyewear, available from Candela, provides adequate protection against reflected or scattered laser radiation, or inadvertent brief exposure to the laser beam. Laser safety eyewear should be stored away from direct sunlight and at temperatures of 65°-75°F or 18°-24°C.

The protective eyewear recommended for use with this laser system by all personnel are either goggles or spectacles (with side shields) that have an optical density of 7.0 or greater at 755 ± 15 nanometers.

During laser procedures, the patient's eyes must be protected. The opaque patient goggles provided by Candela are appropriate for most patients. It is recommended to place gauze sponges under the opaque patient goggles to ensure that the patient's eyes remain closed. In addition, the opaque goggles do not fit well if used on infants or small children. Gauze sponges moistened with water and taped over

the eyelids, or a moistened facecloth held over the eyes are recommended. If the patient is asleep, the eyes should be taped closed and covered with moistened gauze sponges.

Note

Observe all of the fire hazard cautions in Section 2.5 whenever using combustible materials, such as gauze sponges or cloths.

Even when wearing protective eyewear, looking directly into the path of the laser beam may cause permanent eye damage.

The laser beam emitted by the ALEXLAZR should never be directed at any part of the body other than the intended site of treatment or testing. Care should be taken to avoid unintended exposure of any part of the patient or other personnel to the laser beam.

Removal of any of the exterior panels could allow access to hazardous levels of laser radiation. For this reason, these panels are designed not to be easily removable; they must not be removed except by authorized trained service personnel.

All windows in the room where the laser system is being used must be covered with opaque material, and measures should be taken to prevent unauthorized access. A remote (CDRH) interlock is provided, which can be connected to the laser room doors, so that the high voltage power supply in the laser system will be turned off if a door is opened during a procedure.

Laser warning signs must be posted at all entrances whenever the laser system is being operated. Two signs are provided by Candela with each laser system, and extra signs may be purchased.

The following precautions should be followed to help ensure optical safety:

1. Identify the laser room clearly. Post appropriate warning signs in prominent locations at all entrances to the laser room.

2. Cover all windows, portholes, etc. with opaque material to prevent laser light escaping from the laser room.

3. Restrict entry to the laser room when the ALEXLAZR is in operation. Allow access to the laser room only to those personnel both essential to the procedure and well trained in laser safety procedures.

4. Make sure that all laser room personnel are familiar with the laser system controls and know how to shut down the laser system instantly.

5. Appoint one person to be responsible for the laser system controls during the procedure.

6. Avoid accidental exposure to the laser beam either directly, or reflected from a surface, by ensuring that all personnel wear appropriate safety eyewear whenever the laser system is on. Verify that the protective eyewear used is known to protect against the wavelengths emitted by the ALEXLAZR.

7. Never look directly into the laser beam coming from the laser system, or reflected from a surface, even when wearing protective eyewear.

8. Never allow the laser beam to be directed at anything other than the targeted area, the calibration port or a safe beam stop.

9. Never permit reflective objects such as jewelry, watches, instruments or mirrors to intercept the laser beam.

10. When the laser system is not actually being used, place the ALEXLAZR in the Standby state. This will prevent accidental pulsing of the laser should anyone inadvertently depress the trigger switch.

11. Never leave the key in an unattended laser system.

## 2.3 ELECTRICAL AND MECHANICAL HAZARDS

The ALEXLAZR converts and amplifies the AC line voltage to produce extremely high voltages inside the laser system which are very dangerous, even lethal. It is possible for high voltage components to retain a charge after the power supply has been turned off, and even after the ALEXLAZR has been disconnected from the line voltage. Therefore, no part of the exterior housing should be displaced, except by a trained and authorized technician.

To secure the laser from moving, both front wheels must be locked. To lock the wheels, step down on the tabs on the front of the wheels. To unlock, push back on the upward extending tab.

The ALEX*LAZR* weighs approximately one hundred pounds and may cause injury if proper care is not used when it is moved. The system is well balanced and is designed to be moved, but it should always be moved carefully and slowly.

## 2.4 CHEMICAL HAZARDS

There are no known chemical hazards associated with the ALEX*LAZR*.

## 2.5 FIRE HAZARDS

All personnel in the laser suite should be aware of the following hazards. All personnel need to be trained in the appropriate responses should an emergency occur.

---

**Caution**

**Extreme caution must be used whenever oxygen is present during the laser procedure. The presence of oxygen greatly accelerates combustion of any flammable material. Failure to follow adequate precautions could result in a fire and possible injury to the patient or staff.**

---

### Special Oxygen Hazards

Hair, gauze, masks, cannula and airway materials can be ignited by laser energy in an oxygen enriched atmosphere. Even if thoroughly soaked with saline, flammable materials can be ignited by laser energy in the presence of oxygen.

### Flash Fire Hazard

The following sequence can lead to a flash fire during laser treatment:

1. Oxygen (with or without other gases) is administered via a mask, endotracheal tube, or nasal cannula. Leakage of oxygen generally occurs near the eye region where a tight seal of the mask is difficult to maintain,

near the nasal area when a nasal cannula is used, or near the mouth area when an endotracheal tube is used.

2. An oxygen rich atmosphere is created beyond the oxygen delivery device and dissipates over the facial area. Transient local concentrations of oxygen can occur sufficient to greatly accelerate combustion.

3. During treatment, the laser pulse strikes combustible material which absorbs the laser energy, resulting in the heating of the material beyond the combustion point. This can be as simple as the singeing of the tip of a single hair at the hairline, eyebrow, or eye lash.

4. This momentary, and possibly unnoticeable, ignition sets off a more significant flash fire. The fire then follows a path from the peripheral area of the oxygen enriched atmosphere towards the most oxygen enriched zone. This is generally the oxygen source (mask, cannula, endotracheal tube).

5. Since the flash fire represents combustion and oxygen itself is not combustible, other combustible substances are involved as a secondary effect of the initial ignition. These combustible substances may be related to hair, gauze, oxygen delivery devices, anesthesia gases, or byproducts of anesthesia in the oxygen enriched atmosphere.

6. A burn may then occur where this secondary effect is present. This accounts for the situation of a burn occurring in an area not being directly treated by the laser.

## Precautions

### Oxygen (With or Without Other Gases)

Flammable materials which are safe in ambient air can become hazardous in the presence of oxygen and laser energy. An oxygen/nitrous oxide mixture is an oxygen enriched atmosphere and must be considered potentially hazardous. Tests have demonstrated that oxygen leaks from all types of delivery devices. This leakage can create a dangerous oxygen enriched atmosphere.

In one study, the Laryngeal Mask Airway (LMA) device was found more leak proof than a conventional mask.

1. Never direct oxygen (with or without other gases) toward or over the laser field.

2. Select the appropriate size mask for patient. Masks with soft or filled cushions help to minimize leakage.

3. An oxygen analyzer may be used to check concentrations around the oxygen source (mask, cannula or airway).

**Hair**

1. Whenever treating near the hairline, eyebrows or any other facial or body hair, the hair must be kept moist with water or saline.

2. Consider shaving hair-bearing areas (beards, mustaches, arm or leg hair, etc.) prior to laser treatment to reduce the risk of igniting hair.

**Gauze, Drapes and Clothing**

1. Avoid combustible materials such as gauze, drapes and clothing in the treatment area.

2. When the use of gauze or drapes is required, all combustible materials must be kept moist with water or saline.

3. Saline soaked Telfa pads rather than gauze should be used to protect the eyes.

**Masks, Cannula and Airway Materials**

Tests have been conducted on various masks, cannula and airway materials. Researchers were unable to ignite clear or translucent materials with laser energy even in the presence of 100% oxygen. Colored (e.g., green) items were ignited with laser energy in an oxygen enriched atmosphere.

- Avoid the use of colored masks, cannula or airway materials.

**Treatment Area Preparation**

Never use any flammable substance, such as alcohol or acetone, in the preparation of the skin for treatment. Use soap and water, if necessary.

When alcohol is used to clean and disinfect any part of the handpiece, it must be allowed to dry before the laser is pulsed.

**Anesthetics**

Anesthetics administered either by inhalation or topically must be approved as non-flammable.

**Instruments**

Since laser beams are reflected by most shiny surfaces, all instruments used in laser procedures should have brushed or blackened non-reflective surfaces.

**Extinguishing Fires**

Simple and effective means of quickly extinguishing a small fire should be kept on hand during each procedure. A small basin of water and a fire extinguisher are recommended.

## 2.6 SAFETY FEATURES

The ALEXLAZR is equipped with features designed specifically to provide safe operation to laser users. All laser personnel should become familiar with the location and operation of the safety features discussed below. (Section Four contains a detailed description of all laser system controls.)

**Keylock Switch**

This key-operated switch controls electrical power to the laser system. The ALEXLAZR can be operated only with the key provided by Candela, preventing unauthorized use of the laser system.

**Emergency Off Switch**

When this red switch (located on the lower right hand side of the control panel) is pressed, the ALEXLAZR is shut down immediately.

**STANDBY and READY Switches and Indicators**

When the STANDBY indicator is illuminated, the ALEXLAZR is in the Standby state, and the laser cannot be pulsed. To begin pulsing the laser, the operator must first press the READY switch on the control panel to put the system into the Ready state. When the READY indicator is illuminated, the laser is in the Ready state and can be

pulsed by depressing the trigger switch. There is a delay of two seconds from the time that the laser system enters the Ready state until the laser can be pulsed.

When the laser system is not being used, it should be returned to the Standby state by pressing the STANDBY switch. By placing the laser system in the Standby state, inadvertent exposure to the laser beam is prevented. If the ALEXLAZR is not pulsed for three minutes, it automatically returns to the Standby state.

**Indicators of Laser Emission**

The "LASING" indicator on the control panel is illuminated when the laser is pulsed.

An audible beep is emitted from the control panel when the system is in the Ready state and is prepared to deliver a pulse of laser energy. If repetitive pulsing is selected, the system will emit a beep as soon as it is prepared to deliver the next pulse of energy.

**Remote (CDRH) Interlock**

A remote interlock is provided, which can be connected to the doors of the laser room, so as to put the laser system into the Standby state if the doors are opened while the ALEXLAZR is in the Ready state.

## 2.7 LABELS

Government regulations require that certain warning and other labels appear on the ALEXLAZR, and be reproduced in this manual. These labels are shown in Figures 2-1 and 2-2. Label locations are illustrated in Figure 2-3. All laser operators should be familiar with the location and meaning of the labels. Replacement labels are available from Candela.

The ⚠ symbol on the side panel (item 9, Figure 2-2) is placed there to draw the attention of the user to the manual for further information concerning the main circuit breaker. The circuit breaker should be placed in the "off" position when the system is not being used. When the system is to be used, the circuit breaker must be moved to the "on" position. If during operation the circuit breaker is tripped, the user should contact Service for assistance. Even if the problem is one that can be remedied without a service call, it is essential that Service be notified of the occurrence, and consulted as to the appropriate response.

The ⚠ symbol appears on two other labels, whose wording is reproduced below:

Item 2, Figure 2-1: "Caution: This laser will heat and may ignite materials that absorb laser energy. Combustible materials in the treatment area should be kept moist with water. The presence of oxygen greatly accelerates combustion."

See Section 2.5 for further information on fire hazards associated with the use of the laser system.

Item 3, Figure 2-1: "Caution: Before inserting the handpiece into the calibration port, ensure that the distance gauge is removed and the handpiece is clean."

See Section 6.2 for further information on cleaning the handpiece.

## Figure 2-1 Required Labels

Item 1

LASER
APERTURE

Item 2

CAUTION

THIS LASER WILL HEAT AND MAY IGNITE MATERIALS THAT ABSORB LASER ENERGY. COMBUSTIBLE MATERIALS IN THE TREATMENT AREA SHOULD BE KEPT MOIST WITH WATER. THE PRESENCE OF OXYGEN GREATLY ACCELERATES COMBUSTION.

Item 3

**CAUTION**

**Before inserting the handpiece into the calibration port, ensure that the distance gauge is removed and the handpiece is clean.**

Item 4

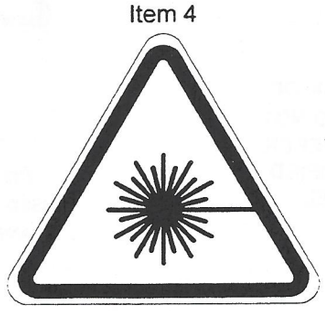

Item 5

**LASER RADIATION**

**AVOID EYE OR SKIN EXPOSURE TO**

**DIRECT OR SCATTERED RADIATION.**

**CLASS 4 LASER PRODUCT**

**PER EN60825-1:1994**

## Figure 2-2 Required Labels (continued)

Item 6

**CLASS 4 LASER**

| | |
|---|---|
| Maximum Pulse Energy | 1.6 J |
| Pulsewidth | 50 NSEC NOMINAL |
| Wavelength | 755 nm |

Item 7

DANGER

VISIBLE AND/OR INVISIBLE LASER RADIATION
AVOID EYE OR SKIN EXPOSURE
TO DIRECT OR SCATTERED RADIATION

ALEXANDRITE LASER 755 nm
MAX OUTPUT 1.6J, 50 NSEC NOMINAL

CLASS IV LASER PRODUCT

Item 8

This laser product complies with DHHS radiation performance standards 21 CFR Chapter 1 Subchapter J for a Class IV laser product.

Item 9

Item 10

**"CAUTION"**

**TO REDUCE THE RISK OF ELECTRIC SHOCK, DO NOT REMOVE COVERS. REFER SERVICING TO QUALIFIED SERVICE PERSONNEL.**

Item 11

**- DANGER -**

**RISK OF EXPLOSION IF USED IN THE PRESENCE OF FLAMMABLE ANESTHETICS**

Item 12

PULSED LASER
CANDELA LASER CORP., 530 BOSTON POST RD
WAYLAND, MA 01778 MADE IN U.S.A.

| | | |
|---|---|---|
| CURRENT/VOLTAGE ~ | Model No. | |
| FREQUENCY 50/60 Hz | | |
| POWER VA | Serial No. | |
| BAZ. No. | Date of Manufacture | |
| FTZ No. | | |

**Figure 2-3 Location of Labels**

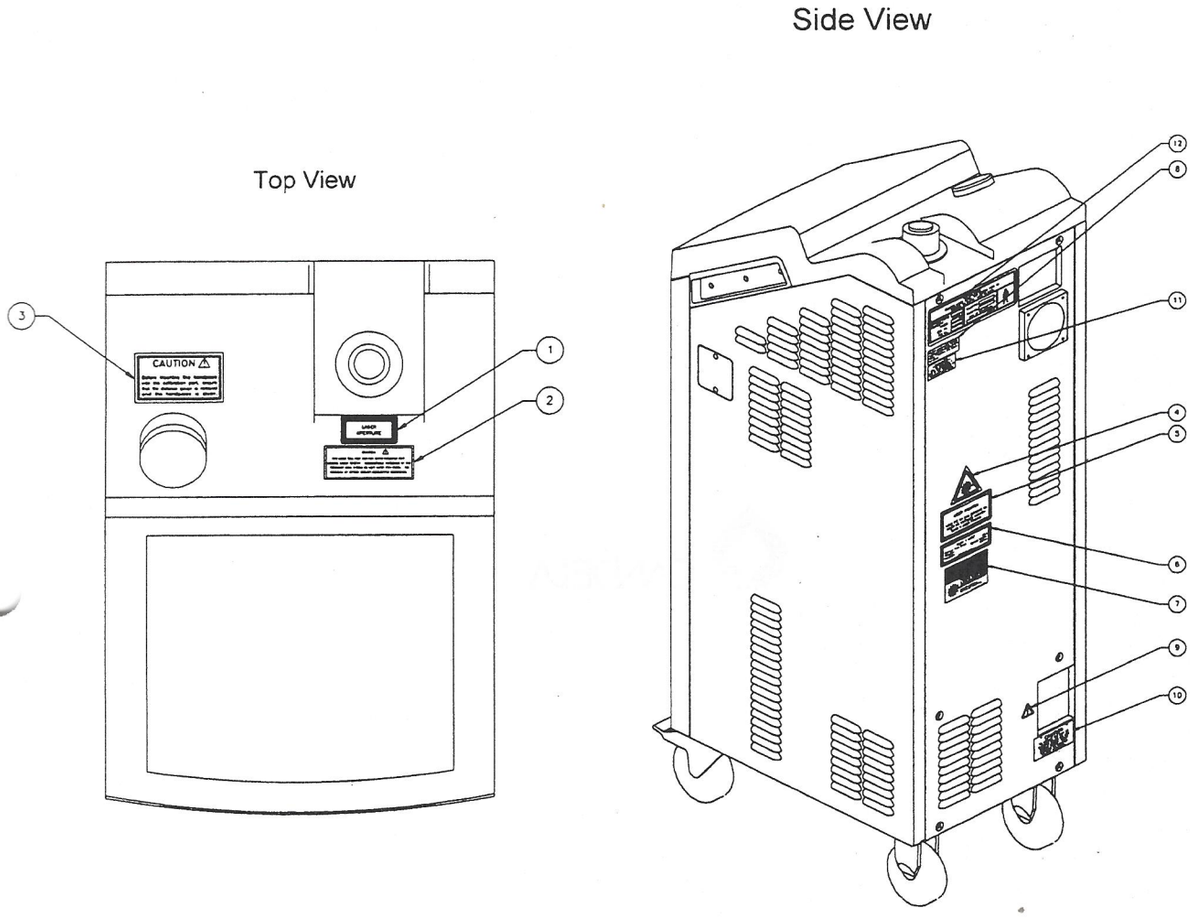

# SECTION THREE

# INSTALLATION

Section Three covers the installation site requirements and the potential relocation of the system.

## 3.1 CUSTOMER'S RESPONSIBILITIES

Before installation of the ALEXLAZR, the intended site must be prepared as described in this section. The site must have sufficient space to accommodate the laser system, must provide the proper electrical power configuration and receptacles, and must meet the additional environmental specifications outlined in this section.

## 3.2 MANUFACTURER'S/DISTRIBUTOR'S RESPONSIBILITIES

Installation of the ALEXLAZR system is performed by a service representative. Following installation, a Nurse Consultant instructs designated personnel on the basic operation and care of the laser; this instruction supplements the more detailed information presented in this manual. Such instruction is not a substitute for the in-depth clinical training required of a physician to become proficient in the use of the ALEXLAZR. (For information on clinical laser training, contact Candela.)

The laser system is equipped with a remote (CDRH) interlock, which can be connected to switches on the laser room doors, so that the system will return to the Standby state if a door is opened during a procedure. For information on the installation of the remote interlock, please contact Service.

## 3.3 UPON DELIVERY OF THE LASER

1. Examine the shipping materials for exterior damage or evidence of mishandling. If the crate appears damaged, note the information on the straight bill of lading, notify the carrier and Candela immediately, and request an inspection from the carrier. Such a request must be made within seven working days of delivery. (Candela is not responsible for damage to equipment occurring during shipping; it is the purchaser's responsibility to file a claim with the carrier.)

2. If it is necessary to store the laser system temporarily, make sure that the area is heated and dry and can be secured.

3. Do not attempt to unpack the laser system. This is the responsibility of the service technician who installs the system.

## 3.4 FACILITIES REQUIREMENTS

### 3.4.1 Space Requirements

Sufficient floor space is required for the laser system. Approximately 15 inches (40 cm) of clearance is required between the rear panel of the laser system and the wall behind it, to allow room for the power cord and circulation of air from the cooling vents. The dimensions of the ALEXLAZR system are as follows.

| | |
|---|---|
| Height: | 45 inches (114.3 cm) |
| Width: | 14 inches (35.6 cm). |
| Depth: | 22 inches (55.9 cm). |

### 3.4.2 Electrical Requirements

In the US, a NEMA L6-30R receptacle, or equivalent, is required. For ALEXLAZR systems shipped internationally, a suitable plug and receptacle must be supplied by the customer.

---

**WARNING**

**THE POWER PLUG MUST BE INSTALLED BY A QUALIFIED PERSON, IN ACCORDANCE WITH IEC REQUIREMENTS AND THE APPROPRIATE NATIONAL ELECTRICAL CODE.**

---

The power receptacle must be within 15 feet (4.5 meters) of the intended laser system location, and must be earth-grounded. The safety ground wire of the power system (green or green with a yellow stripe) is an acceptable ground for the laser system, provided that it is terminated only to an earth ground stake or dedicated ground grid. Poor grounding can interfere with the operation of the laser system.

The power receptacle for the laser system must meet the following requirements:

| | |
|---|---|
| Voltage ..... | 230 VAC ± 10% single phase, or<br>208 VAC ± 10% single phase, or<br>200 VAC ± 10% single phase |
| Current..... | 20 A service minimum |

The input power line should be free of transients (spikes, sages and/or surges). A dedicated branch circuit is recommended.

Operation of the ALEXLAZR on a power line that is not consistently within the specification may cause damage to the system and may void the warranty.

### 3.4.3 Environmental Requirements

**Air Quality**

1. Ensure that the atmosphere is non-corrosive, with no salts or acids in suspension in the air. Acids, corrosives, and volatile materials are likely to attack electrical wiring and the surfaces of optical components.

2. Keep air-borne dust particles to a minimum. Dust particles can cause permanent damage to optical surfaces. Metallic dust can be destructive to electrical equipment.

**Humidity**

20% to 80%, non-condensing.

**Ambient Temperature**

1. Maintain the temperature in the laser room between 50° and 80°F (10° and 27°C).

2. Avoid placing the laser system near heating outlets or other openings that might be the source of air currents that could cause uneven cooling in the laser system.

3. The laser system must be stored at a temperature between 40° and 110° F (4.5° and 43° C)

### 3.4.5 Internal Cooling Water Requirements

Distilled water:..... 1.8 liters, provided by the customer (readily available at hospitals, where it is used for sterile water).

Using water that is not distilled will result in poor flashlamp performance, and may result in permanent flashlamp damage.

## 3.5 RELOCATION

Care should always be taken when moving the ALEXLAZR. The system was designed to be moved, but special care should be taken when thresholds, elevator doors, ramps, and other uneven or sloping floor surfaces are encountered. A severe physical shock could cause the alignment of the laser head or the optical fiber to be disturbed. Furthermore, if the system is allowed to get out of control when being moved, personal injury or physical damage could result.

If it becomes necessary to relocate the ALEXLAZR, call Candela or the distributor for details. Failure to do so may result in damage to the system, and may void any warranty.

# SECTION FOUR

# CONTROLS AND INDICATORS

Section Four describes the controls and indicators of the ALEXLAZR system and their function during normal operation of the system

It is assumed that the ALEXLAZR system is to be used exclusively by trained physicians. This section of the manual explains the controls of the ALEXLAZR system itself; it does not attempt to instruct on clinical applications. Before attempting to operate the ALEXLAZR system, all personnel should read and understand this section, and the safety considerations discussed in Section Two.

## 4.1 CONTROL PANEL

The ALEXLAZR control panel, located on the upper front of the laser system, consists of the input power controls, the system status display, and push-button switches. The display provides information about various system functions. The push-button switches are used in conjunction with the display to control the system. Electrical power to the laser system is controlled by the keylock switch and the Emergency Off switch on the lower right hand side of the control panel.

### 4.1.1 Controls and Indicators

Figure 4-1 shows the ALEXLAZR control panel. The various operating parameters, controls, and indicators are described on the following pages.

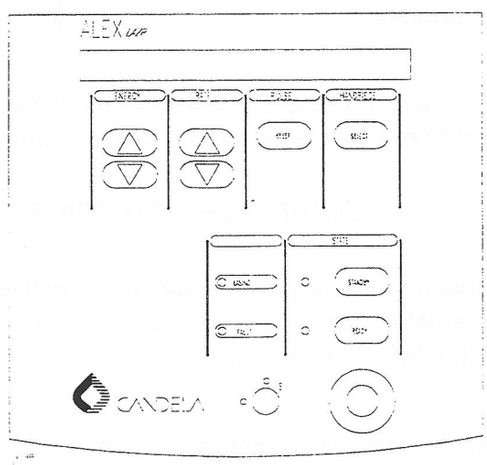


**Figure 4-1 ALEXLAZR Control Panel**

### Keylock Switch

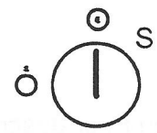


The keylock switch controls the main power input to the laser system, preventing unauthorized use. The switch has three positions: "O" (off), "⊙" (on), and "S" (start). To start the system, the key must be turned from the "O" position to the "S" position, and then released; the switch returns to the "⊙" position once the system starts. The laser requires about 10 minutes to warm up. The key should be removed when the system is not in use, and stored in a secure place. The main circuit breaker (on the lower rear panel of the laser system) should be moved to the "O" (off) position when the laser system is not in use.

### Emergency Off Switch

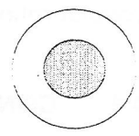

The large red Emergency Off push-button switch is used to shut down the laser system in an emergency. When the push-button is pushed in, system power is shut off. In order to restart the system, the keylock switch must be turned to the "S" position.

### Ready and Standby

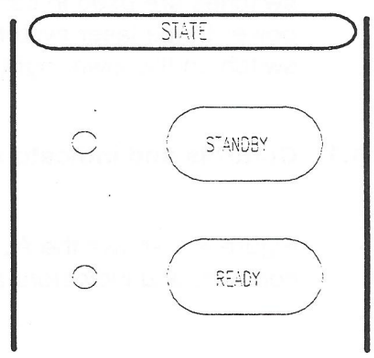


The READY and STANDBY controls are used to switch the laser system between the Ready and Standby states.

When the system is in the Standby state, the laser cannot be triggered as the high voltage power supply is turned off. In the Ready state, the high voltage power supply is turned on, the flashlamps are lit, and the treatment laser will be pulsed when the trigger switch is pressed.

Pressing the READY switch places the laser system in the Ready state. The following message is briefly displayed on the display panel:

ENTERING READY STATE

When the READY indicator comes on, the system is in the Ready state. As a precaution, there is a delay of two seconds from the time that the system enters the Ready state before the laser can be pulsed.

Whenever the treatment laser is not actually being used, the laser system should be switched to the Standby state, by pressing the STANDBY switch, as a precaution. If

the laser is not pulsed for three minutes, the system will revert to the Standby state automatically.

The laser system automatically returns to the Standby state (and turns off the high voltage power supply) if a fault condition is detected. Once the problem has been corrected, the fault can be cleared by pressing any switch. The types of faults which may occur are discussed in Section Six.

**Lasing Indicator**

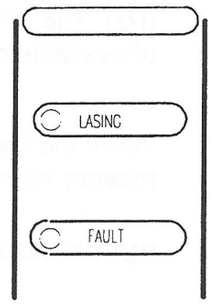


The LASING indicator is illuminated briefly each time the laser is pulsed.

**Fault Indicator**

The FAULT indicator is illuminated when a fault occurs within the system. A fault message is displayed that specifies the type of fault that has occurred, and may indicate the action to be taken. More detail on these fault messages and the action to be taken is provided in Section Six. If the fault was temporary, the fault message and the FAULT indicator may be cleared by pressing any switch.

**Audible Indicator**

An audible indicator beeps under certain fault and prompt conditions.

### 4.1.2 System Status Display

The System Status Display contains a 40-character display which contains the following system fields: ENERGY, RATE, PULSE COUNT, and HANDPIECE

The System Status display and all the indicators are tested when the STANDBY switch is held down while the system is turned on.

Each system field has a designated location in the System Status display. All displayed fields and the methods for adjusting them are discussed in detail below.

**ENERGY**

5.0 J/cm2

The ENERGY field displays the energy per unit area (FLUENCE) to be delivered from the selected handpiece, in Joules per square centimeter ($J/cm^2$). When the laser system is turned off, the system automatically

saves the most recent ENERGY setting until the next time that the system is used. The desired ENERGY setting is adjusted by pressing either the Up or Down arrow switch.

**RATE**

| | | | |
|---|---|---|---|
| 5.0 J/cm2 | 1Hz | 0 | 3mm |

The RATE (or Repetition Rate) field displays the currently selected pulse repetition rate for the laser system in Pulses per Second, or Hertz (Hz). The RATE field is adjusted by pressing the Up or Down arrows through the list of available pulse repetition rates for the system.

When the laser system is turned off, the system automatically saves the most recently selected RATE setting until the next time that the system is used.

**PULSE COUNT**

| | | | |
|---|---|---|---|
| 5.0 J/cm2 | 1Hz | 0 | 3mm |

The PULSE COUNT field displays the accumulated number of pulses delivered. The PULSE COUNT field can be reset to zero by pressing the RESET switch. When the laser system is turned off, the system automatically resets the PULSE COUNT value to zero.

**HANDPIECE**

| | | | |
|---|---|---|---|
| 5.0 J/cm2 | 1Hz | 0 | 3mm |

The HANDPIECE field displays the diameter of the treatment spot size in millimeters (mm) that the laser system is currently configured to deliver. The handpiece must be selected by the user before calibrating the system.

---

**WARNING**

**ENSURE THAT THE SPOT SIZE ON THE HANDPIECE MATCHES THE HANDPIECE SIZE DISPLAYED IN THE HANDPIECE SECTION ON THE DISPLAY. FAILURE TO DO SO CAN RESULT IN THE DELIVERY OF IMPROPER ENERGY TO THE PATIENT.**

---

### 4.1.3 Calibration Port

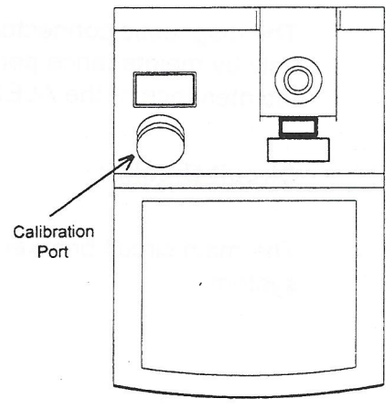


The calibration port is used for the energy calibration procedure. The delivery system handpiece (without the distance gauge) is inserted into the calibration port during calibration of the energy output of the system. For information on calibration of the energy output of the system, see Section 5.6.

Before the handpiece is placed in the calibration port, the distance gauge must be removed, and the handpiece cleaned and dried. The handpiece lens should be checked and cleaned if dirty. The distance gauge must be cleaned and dried before reuse, or replaced. A distance gauge must be installed before treatment resumes. See Section 6.2 for the handpiece and distance gauge cleaning procedure.

## 4.2 OPERATION CONNECTORS

The following connectors and switches are located on the side and rear panels.

**Remote (CDRH) Interlock Connector**

A connector which enables the interlock circuit in the laser system to be connected to the laser room doors, so that the laser will be turned off if a door is opened during a procedure.

If the remote (CDRH) interlock connector is wired to switches on the doors of the laser room, those doors must be closed when the laser system is in use; (shielded cable must be used for the connection to the remote switches); if the remote interlock is not being used, it must be disabled by a jumper across the interlock connection on the rear panel. The laser system is shipped from the factory with the disabling jumper in place.

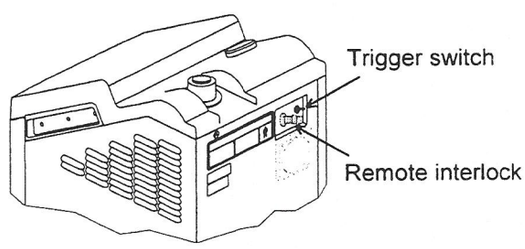


**Trigger Switch Connector**

The connector for the trigger switch used to control the delivery of pulses.

## Diagnostic Connector

The diagnostic connector, located on the upper left side of the system, is to be used only by maintenance personnel during installation, servicing or preventive maintenance of the ALEXLAZR.

## Circuit Breaker

The main circuit breaker for the laser system.

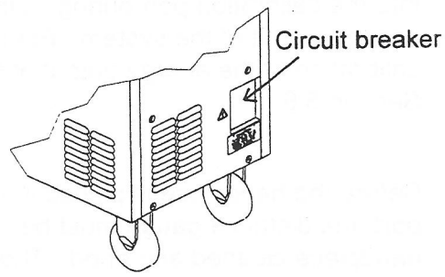

# SECTION FIVE

# OPERATION

Section Five contains information on the normal operation of the ALEX*LAZR* system.

## 5.1 TRAINING REQUIREMENTS

This manual describes the operation of the ALEX*LAZR* system as an instrument. Appendix A provides information for the physician, and Appendix B provides references to the relevant medical literature, but this manual is not a substitute for the training necessary to become qualified in the clinical application of the laser system. For information on such training, contact Candela.

---

**Caution**

**Federal (USA) law restricts this device to sale by or on the order of a physician.**

**Use of controls or adjustments or performance of procedures other than as specified herein may result in hazardous radiation exposure.**

**Appropriate safety eyewear, as described in Section Two, must be worn by all personnel in the area where the ALEX*LAZR* is operating.**

---

## 5.2 DESCRIPTION OF THE DELIVERY SYSTEM

The delivery system of the ALEX*LAZR* is a lens coupled user replaceable optical fiber. Treatment handpieces, each designed to deliver the laser energy in a specific spot size, attach to the distal end of the optical fiber.

## 5.3 CAUTIONS

1. Do not pulse the laser without a handpiece installed on the end of the optical fiber. Do not pulse the laser unless the handpiece is placed correctly in the calibration port, or aimed directly at the desired treatment site.

2. To avoid inadvertent pulsing of the laser, the ALEXLAZR should be put into the Standby state whenever the laser is not being used for treatment.

3. Put the laser system into the Standby state, or turn it off, before changing the handpiece.

4. To avoid damage to the optical fiber, take care when handling the handpiece. Limit bends of the fiber to a radius of 6 inches (15 cm) or greater.

5. The distal end of the fiber must always have a handpiece attached to it. This protects the distal end from dust and accidental handling.

6. Keep the red protective caps on if the delivery system is stored in the box. It is recommended that the delivery system remain installed on the laser whenever possible.

## 5.4 INSTALLATION OF THE HANDPIECE

1. Remove the handpiece from its package.

2. Carefully remove any protective caps.

3. Snap the handpiece to the distal tip of the optical fiber.

4. Select the handpiece on the control panel.

5. Before use, the energy output of the handpiece must be calibrated at the desired ENERGY and RATE settings, as described in Section 5.6, Calibration Procedure.

---

**WARNING**

**ENSURE THAT THE SPOT SIZE ON THE HANDPIECE MATCHES THE HANDPIECE SIZE DISPLAYED IN THE HANDPIECE SECTION ON THE DISPLAY. FAILURE TO DO SO CAN RESULT IN THE DELIVERY OF IMPROPER ENERGY TO THE PATIENT.**

---

## 5.5 LASER SYSTEM START-UP

---

**Caution**

**Before starting up the laser system for any reason, the operator must ensure that all personnel in the area are familiar with the safety concerns outlined in Section Two, and that they are equipped with the correct safety eyewear.**

**Before the laser system is turned on, a handpiece must be installed on the end of the optical fiber.**

---

Before turning on the laser system, check that it is connected to the required electrical power, and that the main circuit breaker is in the on position. To prevent the laser system from moving inadvertently, lock each front wheel.

To start the laser system, turn the keyswitch to the "S" (start) position and then allow it to return to the "⊙" (on) position; (the switch is spring-loaded). The system automatically enters the Standby state after an approximately 10 minute warm up period.

Before the laser system is used for treatment, the handpiece must be installed and its energy output must be calibrated, as described in Section 5.6.

## 5.6 CALIBRATION PROCEDURE

### Introduction

Energy calibration is the automatically controlled procedure by which the laser calibrates the energy output to deliver pulses at the energy density selected on the control panel. During the calibration procedure, the handpiece is inserted in the calibration port, the system is pulsed, and the energy output of the delivery system is read by an internal laser energy meter. The laser determines the high voltage level necessary to obtain each selectable ENERGY setting, and stores this information. Depending on the status of the system, the calibration can require as few as 2 pulses or as many as 20 pulses.

## System Calibration Requirements

There are a number of system conditions that cause a calibration to be required. The system will not allow treatment unless a calibration has been completed.

A calibration is required by the system when:

1. The system is turned on.
2. The user changed the control panel ENERGY field.
3. The user changed the control panel HANDPIECE field.
4. A warning or fault has occurred requiring a calibration before treatment can continue.
5. The system has been in the Standby state for more than 30 minutes.

If a calibration is required, and the user attempts to treat by pressing the trigger switch, the system will not allow the treatment pulses, and indicates a calibration is required by displaying the following message:

INSERT HANDPIECE INTO CAL PORT

If this occurs, continue with step 3 of the Calibration Procedure below.

## Forcing a Calibration

Sometimes it may be necessary to force a calibration. If the user desires a calibration OR if the handpiece was removed and replaced with another handpiece having the same spot size, a calibration should be forced.

A calibration is forced by changing the ENERGY field one setting lower (or higher), and then putting the ENERGY field back to its original setting. Then, complete the Calibration Procedure as normal.

**Calibration Procedure**

1. Be sure that the desired handpiece is attached to the optical fiber. Select the HANDPIECE on the control panel. (The control panel handpiece selection and the handpiece must match for proper calibration.)

---

**WARNING**

**ENSURE THAT THE SPOT SIZE ON THE HANDPIECE MATCHES THE HANDPIECE SIZE DISPLAYED IN THE HANDPIECE FIELD ON THE CONTROL PANEL. FAILURE TO DO SO CAN RESULT IN THE DELIVERY OF IMPROPER ENERGY TO THE PATIENT.**

---

2. Select the desired ENERGY setting for treatment. This can be done at any time, but if the ENERGY setting is changed after calibration, another calibration procedure will be required.

3. Insert the handpiece into the calibration port.

4. Depress and hold the trigger switch. The laser will automatically pulse the laser as required for calibration (2-20 pulses) and the following message will be displayed:

   CALIBRATING Xmm HANDPIECE

5. When the calibration procedure is complete, the following message will be displayed:

   *CAL OK* - RELEASE TRIGGER SWITCH

6. Release the trigger switch.

7. Remove the handpiece.

If a failure is detected during the calibration procedure a fault message will be displayed. If this occurs, consult Section 6.4 for instruction.

## 5.7 TREATMENT

---

**WARNING**

**DO NOT USE THE ALEXLAZR TO TREAT PATIENTS IF THE SYSTEM CANNOT BE CALIBRATED PROPERLY. TREATING PATIENTS WITH THE SYSTEM OUT OF CALIBRATION IS LIKELY TO RESULT IN THE DELIVERY OF UNINTENDED ENERGY DENSITIES AND POSSIBLE INJURY TO PATIENTS. IF THERE IS ANY REASON TO SUSPECT THAT THE CALIBRATION OF THE ALEXLAZR IS INACCURATE, DISCONTINUE USE OF THE LASER AND CALL SERVICE.**

---

The clinical treatment procedure is described in detail in the Physician's Information Appendix of this manual. The following steps are required for operation of the system during treatment.

At the start of each treatment session, install the desired handpiece on the end of the optical fiber. Calibrate the energy output of the handpiece to be used, as described in Section 5.6.

When the physician is ready to begin treatment, press the READY switch on the laser system control panel. Two seconds after the READY indicator comes on, the laser system is ready for treatment. To pulse the laser, press the trigger switch. During any pause in treatment, the laser system should be returned to the Standby state, for safety. This will happen automatically if the laser is not pulsed for three minutes.

## 5.8 AFTER TREATMENT

1. After treatment has been completed, place the laser system in the Standby state by pressing the STANDBY switch on the control panel.

2. Turn off the laser system by turning the keyswitch to the "ȯ" (OFF) position.

3. Clean the handpiece per Section 6.2 and store in the calibration port or handpiece holder. The delivery system must be stored with a handpiece attached to protect the fiber distal end.

## 5.9 SHUT-DOWN

In an emergency, the laser system can be shut down instantly using the large red Emergency Off button on the control panel.

To shut down the laser system under normal circumstances, press the STANDBY switch to put the system into the Standby state, and then turn the keyswitch to the "ȯ" (OFF) position.

CANDELA

# SECTION SIX

# MAINTENANCE

Section Six contains information on customer maintenance of the ALEX*LAZR*, including cleaning and disinfection. A troubleshooting chart and lists of fault and warning messages are also included.

---

**WARNING**

**THE ELECTRICAL AND LASER RADIATION HAZARDS PRESENT DURING SERVICING OF THE ALEX*LAZR* CAN BE EXTREMELY DANGEROUS IF PROPER SAFETY PRECAUTIONS ARE NOT TAKEN. THE ALEX*LAZR* IS TO BE INSTALLED AND SERVICED ONLY BY QUALIFIED AND AUTHORIZED TECHNICIANS WHO HAVE RECEIVED APPROPRIATE TRAINING FROM CANDELA, AND WHO ARE FAMILIAR WITH THE SAFETY CONSIDERATIONS RELEVANT TO LASER SYSTEMS AND TO HIGH VOLTAGE EQUIPMENT.**

---

## 6.1 GENERAL INFORMATION

In general, the laser system requires no special maintenance by the user. Routine care of the handpieces, cleaning and disinfection of the exterior of the system are covered in Section 6.2. During normal operation, the user is required to calibrate the energy output of the laser system, as discussed in Section 5.6. Solutions to the most common operating problems are provided in the Troubleshooting Chart, Section 6.3; the fault messages that appear on the front panel display are shown in Section 6.4, with the recommended responses.

All other maintenance and service must be performed by a qualified service representative. Routine preventive maintenance of the laser system should be performed by a qualified service representative at least every six months. At each of these preventive maintenance visits, the service representative will check and adjust the functioning of the system.

## 6.2 CLEANING AND DISINFECTION

The exterior of the laser system may be cleaned using a soft cloth moistened with a solution of mild soap and water. Harsh detergents should not be used. If it

becomes necessary to disinfect the exterior of the laser system, a soft cloth moistened with hospital-grade disinfectant may be used.

If it becomes necessary to disinfect the handpieces, they should be wiped with a gauze pad moistened with a 70% alcohol solution. Care should be taken to avoid contamination of the internal optical surfaces of the handpieces.

If the lens inside the handpiece becomes contaminated, it should be cleaned immediately, or else the laser beam will burn the contamination onto the lens surface. To clean the lens, moisten a cotton applicator with alcohol or acetone and wipe the lens **once**. (If the lens is wiped more than once with the same applicator, the contamination will spread around the lens.) Repeat with a new applicator until the contamination has been removed.

A handpiece with a slightly dirty lens can be used for treatment. The calibration procedure compensates for the resulting loss in handpiece transmission to ensure the proper energy is delivered.

## 6.3 TROUBLESHOOTING CHART

| *SITUATION / SYMPTOM* | *PROBABLE CAUSE or FAULT MESSAGE* | *SOLUTION* |
|---|---|---|
| *The system cannot be turned on properly.* | The power is not connected properly. | Check the power cable and the facility circuit breaker. |
| | The laser system circuit breaker is in the "off" position. | Switch the circuit breaker to the "on" position. |
| | The keylock switch was not fully engaged | Turn the keylock switch fully clockwise to the "S" position and release. |
| *The system will not go into the Ready state.* | WARNING--SECURE CDRH CONNECTOR | Check the remote CDRH interlock connection. Press any control panel switch to clear the warning message. |
| | WARNING --RELEASE TRIGGER SWITCH | The trigger switch must not be pressed when entering the Ready state. This is a safety precaution to prevent unexpected pulsing. Press any control panel switch to clear the warning message. |

| SITUATION / SYMPTOM | PROBABLE CAUSE or FAULT MESSAGE | SOLUTION |
|---|---|---|
| *The system will not go into the Ready state (continued.)* | PLEASE WAIT--SYSTEM DELAY REQUIRED | The system has been cycled between Ready and Standby states too many times over a short period. Delay prevents HV dump resistor from overheating. When message is cleared, system can be put in Ready state. (1 minute wait or less.) |
| *The rate is set at 5 Hz and the laser pulses at 4 Hz* | The system has degraded. | A P.M. is required. Call Service. |
| *Coolant over-temperature* | WARNING--COOLANT OVER-TEMPERATURE | Insure that the system's air circulation is not blocked. There should be a 15" clearance between the rear panel and a wall. Remove any items draped over system. Allow the system to cool for 10 minutes in the Standby state before continuing. If problem persists, turn off system and call Service. |

## 6.4 WARNING AND FAULT MESSAGES

The system responds to warnings and faults in a similar fashion.

A warning message typically occurs due to a problem that the user can (in most cases) easily correct (install the delivery system, etc.).

A fault message typically occurs due to a system malfunction. Sometimes clearing the fault and retrying the previous operation can be successfully accomplished without further faults occurring. If the fault message persists, call Service.

Both warning and fault processing automatically places the system into the Standby state. When the problem has been corrected, press any control panel switch to clear the fault and continue operation.

### 6.4.1 WARNING MESSAGES

| *MESSAGE* | *DETERMINATION CRITERIA* |
|---|---|
| WARNING--WARM-UP TIME EXCEEDED | The warm-up time has been exceeded (25 minutes.) The system will continue to be warmed up. If the laser subsequently reaches the proper temperature, the laser can be used as normal. |
| WARNING--COOLANT OVER-TEMPERATURE | The DI temperature exceeded operating conditions (32-180°F). If the system was being pulsed at high energies, allow the system to cool for 10 minutes in the Standby state before attempting to continue. |
| WARNING--INSTALL DELIVERY SYSTEM *(Calibration required)* | The delivery system has been disconnected from the laser. Install or reconnect the delivery system, then clear the warning. |
| WARNING--SECURE CDRH CONNECTOR | The CDRH interlock has opened or is not connected. |
| WARNING--RELEASE TRIGGER SWITCH | The trigger switch is already depressed as the system attempts to enter the Ready state. |

### 6.4.2 FAULT MESSAGES

| FAULT | DESCRIPTION | DETERMINATION CRITERIA |
|---|---|---|
| *Fault 1* | ROM checksum failure | The read-only-memory (ROM) checksum performed at power-up failed. This will not allow system operation. The fault LED flashes on and off. Call Service. |
| *Fault 6* | Coolant flow malfunction | The DI flow sensor indicates that the DI coolant is not circulating while the DI pump is on, or indicates flow while the pump is off. The pump and heaters are turned off. Call Service. |
| *Fault 7* | Coolant level empty | The DI coolant level is low. The pump and heaters are turned off. Call Service. |
| *Fault 9* | HVPS over-temperature | The high voltage power supply detected an over-temperature or over-voltage condition. Call Service. |
| *Fault 10* | HVPS tolerance error | The high voltage sample is not within 10% of the high voltage reference. This fault occurs if the system went into the Ready state and, after 2 sec, HV was not within ±10%; or, if prior to each pulse, HV was not within ±10%. Call Service. |
| *Fault 11* | HV relay malfunction | The high voltage relay status does not indicate the commanded state. Call Service. |
| *Fault 14* | Beam shutter opening malfunction | The beam shutter sense indicates that the shutter is not open when the firmware has commanded that the shutter open. Call Service. |

| FAULT | DESCRIPTION | DETERMINATION CRITERIA |
|---|---|---|
| *Fault 15* | Beam shutter closing malfunction | The beam shutter sense indicates that the shutter is not closed when the firmware has commanded that the shutter close. Call Service. |
| *Fault 16* | Attenuator 1 opening malfunction | The attenuator 1 sense indicates that the shutter is not open when the firmware has commanded that the shutter open. Call Service. |
| *Fault 17* | Attenuator 1 closing malfunction | The attenuator 1 sense indicates that the shutter is not closed when the firmware has commanded that the shutter close. Call Service. |
| *Fault 18* | Attenuator 1 transmission error *(Calibration required)* | The attenuator 1 transmission is <74% or >86%. |
| *Fault 19* | Calibrate malfunction 1 *(Calibration required)* | Tried 11 times to adjust HV to get 2 pulses within ±20% of the Low Cal point. Call Service. |
| *Fault 20* | Calibrate malfunction 2 *(Calibration required)* | Tried to set HV below minimum during the low, slope, or attn2 calibrate segments. Call Service. |
| *Fault 21* | Calibrate malfunction 3 *(Calibration required)* | Tried to set HV above maximum during the low or slope, calibrate segments. Call Service. |
| *Fault 22* | Calibrate malfunction 4 *(Calibration required)* | Did not get 2 valid pulses in 4 tries during the slope, mid, attn1, attn2, and hi segments. Call Service. |
| *Fault 23* | Calibrate malfunction 5 *(Calibration required)* | Tried 3 pulses and none were within ±14% during the vfy segment. Call Service. |

| FAULT | DESCRIPTION | DETERMINATION CRITERIA |
|---|---|---|
| *Fault 24* | Energy out of range *(Calibration required)* | The actual head energy reading is 14% greater than the expected head energy for the current control panel density setting for 2 consecutive pulses or the actual head energy reading is 14% less than the expected head energy for the current Control Panel density setting for 5 consecutive pulses. Call Service. |
| *Fault 25* | Transmission over-range *(Calibration required)* | The Cal Port Energy transmission ≥ 110%. Call Service. |
| *Fault 32* | HVPS charging malfunction | HV sample did not achieve at least -10% of HV reference within 3 seconds of any increased HV change. Call Service. |
| *Fault 34* | Maximum head energy exceeded *(Calibration required)* | Laser head energy exceeded 900 mJ. Energies above this level can cause permanent damage to the optics. Call Service. |
| *Fault 35* | Attenuator 2 opening malfunction | The attenuator 2 sense indicates that the shutter is not open when the firmware has commanded that the shutter open. Call Service. |
| *Fault 36* | Attenuator 2 closing malfunction | The attenuator 2 sense indicates that the shutter is not closed when the firmware has commanded that the shutter close. Call Service. |
| *Fault 37* | Attenuator 2 transmission error *(Calibration required)* | The attenuator 2 transmission is <56% or >72%. |
| *Fault 38* | Pockels cell not connected | The Pockels Cell is not connected. The pulsewidth specification will not be met. |

CANDELA

# SECTION SEVEN

# SERVICE

Section Seven contains information on the service procedure for calibrating the ALEX*LAZR* system's internal energy meter.

Note

The procedures contained in this section are service procedures, to be performed by appropriately trained technicians. They are not to be performed by the user.

---

**WARNING**

**THE ELECTRICAL AND LASER RADIATION HAZARDS PRESENT DURING SERVICING OF THE ALEX*LAZR* CAN BE EXTREMELY DANGEROUS IF PROPER SAFETY PRECAUTIONS ARE NOT TAKEN. THE ALEX*LAZR* IS TO BE SERVICED ONLY BY QUALIFIED TECHNICIANS WHO HAVE RECEIVED APPROPRIATE TRAINING FROM CANDELA. ANY ATTEMPT BY AN UNAUTHORIZED PERSON TO PERFORM ANY SERVICE PROCEDURE WILL VOID ANY WARRANTY ON THE LASER SYSTEM.**

---

In section 5.6 of this manual, a procedure is provided for the user to calibrate the energy output of the laser system. During that procedure, the handpiece is inserted in the calibration port, the ALEX*LAZR* is pulsed, and the energy output of the handpiece is read by an internal laser energy meter. The system determines the high voltage level and attenuator positions necessary to select each attainable energy density setting and stores this information.

The internal laser energy meter itself must be calibrated at least once a year by a qualified service technician. This calibration requires using an external laser energy meter whose calibration is traceable to the appropriate national standards agency. The external laser energy meter used must be appropriate for the specified output of the laser system, with an accuracy of ± 6% or better, and a resolution of 1 mJ. This procedure is part of the normal preventive maintenance service procedure.

An IBM compatible computer terminal running Crosstalk XVI or similar software is required, with the following parameters.

| | | |
|---|---|---|
| **Emulation:** VT-100 | **Speed:** 9600 baud | **Data:** 8 bits |
| **Parity:** none | **Duplex:** full | **Mode:** call |
| **Port:** 1 | **Stop bits:** 1 | |

An RS-232 fiber optic link is necessary to connect the ALEXLAZR to the computer terminal. The link consists of "electrical-to-optical" converters on each end, joined by a fiber optic pair. This arrangement is necessary to provide the required isolation between the ALEXLAZR and the computer terminal.

**Parts List**

1. IBM compatible computer terminal.

2. External laser energy meter.

3. RS-232 fiber-optic data link.

4. Potentiometer adjustment tool.

**Procedure**

Note

Use the same laser energy meter for all the following laser energy detector calibrations. Make sure all personnel in the area are wearing safety eyewear appropriate for the ALEXLAZR.

1. Install the 3 mm spot size handpiece and turn on the ALEXLAZR. **Be sure to select 3 mm on the front panel.**

2. Connect the computer terminal to the ALEXLAZR using the fiber optic data link. The ALEXLAZR output data port is a 25 pin D (female) type connector located in the upper left side near the calport. A cover plate on the side panel can be removed to access the connector.

3. On the computer terminal, press <M><M><ENTER> to enter maintenance mode. Press <1> to select the "Toggle Commands/Status" option.

4. Set the external meter to a range suitable for measuring an output between 300 mJ and 800 mJ. Position the handpiece to direct the beam squarely into the detector of the external energy meter.

5. Using the <E> and <R> keys, insure that the ATTEN1 and ATTEN2 are in the OUT_PATH position. Using the <T> key, insure that the SHUTTER is the OUT_PATH position. From the control panel, place the ALEXLAZR into the Ready state.

---

**Caution**

**Placing the ALEXLAZR into the Ready state charges the high voltage power supply.**

---

The voltage to which the high voltage power supply has been charged can be read from the VOLTAGE "smp" display on the terminal. Type <2500><ENTER> on the terminal to set the high voltage to 2500 V. **VERIFY THE VOLTAGE AFTER "*ref=" ON THE SCREEN BEFORE PULSING! TOO MUCH VOLTAGE WILL DESTROY THE LASER!** If the high voltage was previously higher, allow time for the high voltage to discharge to 2500 V (the current high voltage value is always displayed on the terminal as just mentioned).

6. Depress the trigger switch to pulse the laser and note the energy reading on the external meter.

7. Adjust the high voltage in 50 V increments until the external meter reads 475 - 525 mJ. Verify that the HD energy displayed on the terminal is between 600 and 800 mJ. If it is too low, press <E> to close ATTEN1 ("IN-PATH") and re-adjust the voltage to get 475 - 525 mJ into the external meter. With ATTEN1 in path, the HD energy must now be between 480 mJ and 640 mJ.

8. Put the handpiece into the Calport. Pulse the laser 5 times. Fill in the table below. The Head Energy and Calport Energy, as measured by the internal head detector, are updated after each pulse on the terminal.

| | Head Energy (Int. Detector) | Calport Energy (Int. Detector) |
|---|---|---|
| 1. | _____ | _____ |
| 2. | _____ | _____ |
| 3. | _____ | _____ |
| 4. | _____ | _____ |
| 5. | _____ | _____ |
| Ave1: | _____ | _____ |

9. Direct the handpiece into the external meter and deliver 5 pulses into the meter. Fill in the table below.

| | Head Energy (Int. Detector) | Fiber Eng. (Ext. Detector) |
|---|---|---|
| 1. | _____ | _____ |
| 2. | _____ | _____ |
| 3. | _____ | _____ |
| 4. | _____ | _____ |
| 5. | _____ | _____ |
| Ave2: | _____ | _____ |

10. Calculate the corrected Calport average as follows:

$$\text{Corrected Calport Ave} = \text{Calport Average} * \frac{\text{Head Ave 2}}{\text{Head Ave 1}} = \_\_\_\_\_$$

11. Calculate the Calport % error as follows:

$$\text{Calport \% Error} = \frac{\text{Corrected Calport Ave - Fiber Energy Average}}{\text{Fiber Energy Average}} * 100 = \_\_\_$$

12. If the Calport % Error is less than ± 2.00%, then the Calport is properly calibrated and this procedure is completed. If the error is greater than ± 2.00 %, then a recalibration is required and steps 13 through 42 must be performed.

13. From the control panel, place the ALEXLAZR into the Standby state. Remove the delivery system and cap the proximal end of the fiber.

14. Remove the plastic front panel. It pulls off. Remove the two screws in the back which secure the ALEXLAZR top cover. Fully raise the top cover.

15. The exposed printed circuit board (PCB) is the analog I/O PCB. Locate the potentiometer (usually blue in color) labeled "R31" in the upper left corner of the board as you face the front of the laser.

18. Reinstall the delivery system with 3 mm handpiece attached. Be sure 3 mm is selected on the front panel. Aim the handpiece squarely into the middle of the external detector head. Set up the external meter to read between 300 mJ and 800 mJ.

19. Using the <E> and <R> keys, insure that the ATTENUATORS are in the OUT_PATH position. Using the <T> key, insure that the SHUTTER is the OUT_PATH position. From the control panel, place the ALEXLAZR into the Ready state.

---

**Caution**

**Placing the ALEXLAZR into the Ready state charges the high voltage power supply.**

---

The voltage to which the high voltage power supply has been charged can be read from the VOLTAGE "smp" display on the terminal. Type <2500><ENTER> on the terminal to set the high voltage to 2500 V. **VERIFY THE VOLTAGE ON THE SCREEN BEFORE PULSING! TOO MUCH VOLTAGE WILL DESTROY THE LASER!** If the high voltage was previously higher, allow time for the high voltage to discharge to 2500 V (the current high voltage value is always displayed on the terminal as just mentioned).

20. Depress the trigger switch to pulse the laser and note the energy reading on the external meter.

21. Adjust the high voltage in 50 V increments until the external meter reads 475 - 525 mJ. Verify that the HD energy displayed on the terminal is between 600 and 800 mJ. If it is too low, press <E> to close ATTEN1 ("IN-PATH") and re-

adjust the voltage to get 475 - 525 mJ into the external meter. With ATTEN1 in path, the HD energy must now be between 480 mJ and 640 mJ.

22. Deliver 10 pulses into the external meter. Fill in the table below. The Head energy (per pulse) as measured by the internal head detector is updated after every pulse on the terminal.

| | Head Energy (Int. Meter) | Fiber Output Eng. (Ext. Meter) |
|---|---|---|
| 1. | _____ | _____ |
| 2. | _____ | _____ |
| 3. | _____ | _____ |
| 4. | _____ | _____ |
| 5. | _____ | _____ |
| 6. | _____ | _____ |
| 7. | _____ | _____ |
| 8. | _____ | _____ |
| 9. | _____ | _____ |
| 10. | _____ | _____ |
| Ave: | _____ | _____ |

23. Calculate the fiber transmission using the formula

$$\frac{\text{Fiber Output Energy Ave}}{\text{Head Energy Ave}} * 100 = \_\_\_\_\_ \%$$

24. Place the delivery system into the Calport.

25. Pulse the laser and adjust R31 on the Analog I/O PCB until the transmission displayed on the terminal is as close as possible to the transmission calculated in step 23.

26. Pulse the laser 5 times. Fill in the table below. The Calport Energy, as measured by the internal calport detector, is updated after each pulse on the terminal.

| | Head Energy (Int. Detector) | Calport Energy (Int. Detector) |
|---|---|---|
| 1. | _____ | _____ |
| 2. | _____ | _____ |
| 3. | _____ | _____ |
| 4. | _____ | _____ |
| 5. | _____ | _____ |
| Ave1: | _____ | _____ |

27. Deliver 5 pulses into the external meter. Fill in the table below.

| | Head Energy (Int. Detector) | Fiber Eng. (Ext. Detector) |
|---|---|---|
| 1. | _____ | _____ |
| 2. | _____ | _____ |
| 3. | _____ | _____^_____ |
| 4. | _____ | _____ |
| 5. | _____ | _____ |
| Ave2: | _____ | _____ |

28. Calculate the corrected Calport average as follows:

$$\text{Corrected Calport Ave} = \text{Calport Average} * \frac{\text{Head Ave 2}}{\text{Head Ave 1}} = \_\_\_\_\_$$

29. Calculate the Calport % error as follows:

$$\text{Calport \% Error} = \frac{\text{Corrected Calport Ave - Fiber Energy Average}}{\text{Fiber Energy Average}} * 100 = \_\_\_$$

30. If the Calport % Error is greater than ± 2.00%, repeat steps 21 through 29.

31. Verify that all of the attenuators are OUT-PATH. If not, put them in this condition by pressing the appropriate key. Put the handpiece into the Calport. Adjust the HVPS to get roughly 650 mJ to 700 mJ into the Calport. Pulse the laser 5 times into the Calport and fill in the table below;

| | Head Energy (Int. Detector) | Calport Energy (Int. Detector) |
|---|---|---|
| 1. | _____ | _____ |
| 2. | _____ | _____ |
| 3. | _____ | _____ |
| 4. | _____ | _____ |
| 5. | _____ | _____ |
| Ave1: | _____ | _____ |

32. Deliver 5 pulses into the external meter. Fill in the table below.

| | Head Energy (Int. Detector) | Fiber Eng. (Ext. Detector) |
|---|---|---|
| 1. | _____ | _____ |
| 2. | _____ | _____ |
| 3. | _____ | _____ |
| 4. | _____ | _____ |
| 5. | _____ | _____ |
| Ave2: | _____ | _____ |

33. Calculate the corrected Calport average as follows;

$$\text{Corrected Calport Ave} = \text{Calport Average} * \frac{\text{Head Ave 2}}{\text{Head Ave 1}} = \_\_\_\_\_$$

34. Calculate the Calport % error as follows:

$$\text{Calport \% Error} = \frac{\text{Corrected Calport Ave - Fiber Energy Average}}{\text{Fiber Energy Average}} * 100 = \_\ \%$$

35. If the Calport Error is greater than ± 5.00%, repeat steps 31 through 34. If, after a second attempt, the Calport Error is still greater than ± 5.00%, then either the Calport is damaged or the analog I/O PCB is defective. Contact Service for replacement parts.

36. Keep ATTEN1 and the SHUTTER OUT-PATH, but press <R> to place ATTEN2 IN-PATH. Put the handpiece into the Calport. Adjust the voltage to deliver 275 - 325 mJ into the Calport. Verify that the HD energy is between 384 and 512 mJ. If it is too low, close ATTEN1 ("IN-PATH") also and re-adjust the voltage to get 275 - 325 mJ into the Calport. With ATTEN1 and ATTEN2 in path, the HD energy must now be between 307 mJ and 410 mJ. Pulse the laser 5 times into the Calport and fill in the table below:

| | Head Energy (Int. Detector) | Calport Energy (Int. Detector) |
|---|---|---|
| 1. | _____ | _____ |
| 2. | _____ | _____ |
| 3. | _____ | _____ |
| 4. | _____ | _____ |
| 5. | _____ | _____ |
| Ave1: | _____ | _____ |

37. Deliver 5 pulses into the external meter. Fill in the table below.

| | Head Energy (Int. Detector) | Fiber Eng. (Ext. Detector) |
|---|---|---|
| 1. | _____ | _____ |
| 2. | _____ | _____ |
| 3. | _____ | _____ |
| 4. | _____ | _____ |
| 5. | _____ | _____ |
| Ave2: | _____ | _____ |

38. Calculate the corrected Calport average as follows;

$$\text{Corrected Calport Ave} = \text{Calport Average} * \frac{\text{Head Ave 2}}{\text{Head Ave 1}} = \_\_\_\_\_$$

39. Calculate the Calport % error as follows:

$$\text{Calport \% Error} = \frac{\text{Corrected Calport Ave - Fiber Energy Average}}{\text{Fiber Energy Average}} * 100 = \_\ \%$$

40. If the Calport Error is greater than ± 5.00%, repeat steps 36 through 39. If, after a second attempt, the Calport Error is still greater than ± 5.00%, then either the Calport is damaged or the analog I/O PCB is defective. Contact Service for replacement parts.

41. Place the ALEXLAZR into the Standby state. Press <ESC><ESC> on the terminal to exit maintenance mode. Turn off the system power and remove the fiber optic link between the terminal and the laser.

42. Remove the delivery system, cap the proximal end, and store it safely. Lower the laser top cover and secure it with its two screws. Re-attach the front cover. Install the delivery system.

# APPENDIX A

# PHYSICIAN INFORMATION

Appendix A furnishes detailed information gained from physician experience in the use of the Q-Switched Alexandrite Laser for treatment of tattoos. Information includes indications and contraindications, patient selection criteria, pretreatment care, treatment procedure, post-treatment care, and education/training information.

## A.1 TRAINING REQUIREMENTS

The Candela ALEXLAZR, a Q-Switched Alexandrite Laser, is designed to be operated only by personnel properly trained in its handling and use. A safety checklist should be completed by a member of the institution's "Laser Team" before the laser system is used.

The "Laser Team" may consist of any personnel qualified to operate the laser system or assist physicians in laser techniques. Such members can include: physician staff, nursing staff, technical staff, or other professional staff.

It is recommended that physicians involved in laser therapy be approved by a Clinical Laser Committee and be qualified in the use of a specific laser system. Prerequisites for accreditation may include but not be limited to:

1. A CME (Continuing Medical Education) accredited ALEXLAZR laser course. (A laser training course should include eight hours of didactic theory, including laser physics, soft tissue interaction and laser safety, and hands-on experience.)

2. A ALEXLAZR laser training course within the physician's specialty, for example, dermatology.

3. Demonstration of ALEXLAZR laser education or training received during a residency program.

4. A Candela sponsored ALEXLAZR Laser System in-service training course.

In addition, nurses and allied health personnel handling the ALEXLAZR system should complete a qualifying program to include but not be limited to: basic laser physics,

laser safety, soft tissue interaction, laser operating procedures, laser set-up procedures, potential hazards, and hands-on experience.

For information about in-service training for the ALEXLAZR, contact Candela Laser Corporation. At the end of this in-service training conducted by Candela, personnel are considered trained only to operate the ALEXLAZR.

## A.2 INDICATIONS/CONTRAINDICATIONS

### A.2.1 Indications

The Candela ALEXLAZR, Q-Switched Alexandrite Laser, is indicated for the treatment of tattoos. The decision to treat with laser therapy should be based upon appropriate diagnostic evaluation and consideration of all patient factors.

### A.2.2 Contraindications

Laser therapy is contraindicated for those patients:

1. With a personal history of skin cancer, such as melanoma.
2. With infected "target" tattoo site or adjacent areas.
3. With photosensitivity in the 755 nanometer region.
4. Using medication for which infra-red light is a contraindication.

Note

Safety and efficacy of treating a tattoo located in the facial area with the ALEXLAZR Q-switched Alexandrite Laser has not yet been determined by FDA review. Therefore the ALEXLAZR laser system is **not** to be used in treating a tattoo located in the facial area.

## A.3 PATIENT SELECTION

Candela's ALEXLAZR, Q-Switched Alexandrite Laser, is intended for the treatment of tattoos. Blue, green and black pigments respond best to treatment, whereas other

pigments show more variable response and test spots are recommended. Different color tattoo pigments may respond at different rates so that some colored areas may require more treatments than others. In general, darker colors should be expected to respond more than lighter colors. Also, the denser the concentration of tattoo pigment, the greater the number of treatments required. Patients with previously treated tattoos can be candidates for selective photothermolysis therapy with this laser system. Tattoos that have not been effectively removed by other treatments may respond well to ALEXLAZR laser therapy, providing prior treatment modalities caused no excessive scarring or skin damage.

## A.4 PRE-TREATMENT VISIT

### A.4.1 General

At the first visit the physician obtains a detailed patient history and examines the tattoo for suitability of Q-Switched Alexandrite Laser therapy. The physician typically determines why the patient is seeking treatment and what expectations the patient has formed regarding the outcome of treatment. He/she then discusses treatment options with the patient, including ALEXLAZR and other treatment modalities. This discussion gives the patient the opportunity to explore the technique further and help decide whether to proceed with ALEXLAZR laser therapy.

### A.4.2 Counseling

During this first visit, the physician should inform the patient of the following:

1. Q-Switched Alexandrite Laser therapy may consist of multiple treatments given over many months, with 2-8 weeks between treatment.

2. There may be discomfort/pain resulting from the treatment.

3. Transient edema may occur immediately following laser therapy.

4. Occasionally, pinpoint (punctate) bleeding at laser impact sites.

5. A white-gray discoloration of the treatment area may appear immediately following treatment and last for a few minutes to a few days. This may be replaced with an erythema or purpura which may persist for several days. A scab may form at the treatment area and drop off in 7-10 days. (It may be helpful to use an anti-bacterial ointment on the treated area and to cover it

with a dressing for a few days after ALEXLAZR laser therapy. This will protect the skin from being abraded and the site infected, a potential source of scar formation.)

6. The treated area may not clear with the first treatment. The same area may be treated more than once for the best results.

7. Possible risk of adverse reactions, e.g., scarring, infection, and hypo- or hyperpigmentation.

### A.4.3 Photographs

Before and after treatment photographs should be used to document progress of treatment. Because many patients are not able to objectively assess their own progress, photographs provide documented evidence on the course of treatment. At each session, before and after treatment photographs should be taken under standardized conditions. Care should be taken so that photographs are similar in magnification, light exposure or flash conditions and color balance. Inclusion of a standard color bar in the photograph serves as a helpful reference.

## A.5 TREATING THE PATIENT

### A.5.1 Training Requirements

The Candela ALEXLAZR is intended for use only by trained and qualified physicians. This portion of the manual describes clinical techniques developed by experts in the field, and is presented as a reference.

**DO NOT rely solely on this information, or this manual, in lieu of formal training in the use of the Q-Switched Alexandrite Laser (ALEXLAZR) for treating tattoos.**

Generally, no anesthesia is required for this procedure. If circumstances require its use, local anesthesia may be administered.

### A.5.2 Determining the Therapeutic Energy Level

The following summarizes the clinical techniques used and established by experts in the field.

**a. Applying a Test Dosage**

Optimum therapeutic energy density is dependent upon the patient's tattoo and individual variations that occur from patient to patient. For example, optimum dosage for the treatment of a tattoo can depend on the origin of the tattoo (amateur, professional, or traumatic), the depth of pigment and the patient's skin type. To determine the correct therapeutic energy density, first test one or more sites on the lesion area with low energy density(ies) (5.5 to 6.5 J/cm$^2$).

---

**CAUTION**

**Because of variations in age, the skin color of the patient, and the type or site of the tattoo, the physician should evaluate patient response using test sites. The patient should be treated with the lowest energy density that produces clearance of the test site.**

---

The appearance of a raised, white spot is the usual marker of a laser pulse delivered using an energy density (fluence) at or above the therapeutic threshold. If a raised, white spot fails to appear at an irradiated site, the energy density is most likely subtherapeutic. The energy density may be increased at additional test sites, using increments of 0.5 J/cm$^2$, until a raised, white spot is noted.

Further, the occurrence of punctate (pinpoint) bleeding at irradiated sites can be a marker of excessive energy density. If laser pulses cause frequent punctate bleeding to appear at irradiated sites, decrease the energy density, using increments of 0.5 J/cm$^2$, until it no longer occurs.

**b. Return Visit - Confirming the Therapeutic Energy Level**

Evaluate the patient response in approximately 4 weeks, and, if no clearance of the lesion is observed, test an additional site with a higher energy density, using an increment of 0.5 J/cm$^2$ higher than the level previously applied. If an adverse effect (e.g., hypo- or hyperpigmentation) is seen, treatment should be adjusted or discontinued.

Note

Enter any changes in the treatment energy level in the patient's medical record.

Treatment should be at the lowest energy density that produces clearance at the test site(s). Inappropriate selection of an initial therapeutic energy density may result in choosing a level that is higher than needed and could possible result in hypo- or hyperpigmentation or scarring.

### A.5.3 Treating the Tattoo

The laser exposure dosage applied to treat tattoos may be in the range of 3.5 to 10.0 J/cm$^2$. Clinical evidence to date suggests the majority of tattoos are effectively treated in the range of 6.0 - 8.0 J/cm$^2$. Clinical effects of fluences higher than 10.0 J/cm$^2$ are not yet known. Therefore, it is not recommended to use fluences over 10.0 J/cm$^2$.

If more than one treatment is needed due to incomplete clearance, the physician should use the lowest energy density producing clearance or lightening of the tattoo at the time of each subsequent treatment. Different pigmented areas within tattoos may have different optimal therapeutic energy levels, therefore the fluence level should be adjusted appropriately to the area being treated. When treating large tattoos, a series of treatment sessions may be used rather than treating the entire tattoo in one session. However, most patients prefer treatment of the entire tattoo at each session and tolerate the treatment well.

The size of the treatment area for the second and/or subsequent visits is directly related to patient tolerance, success with the test site, and the rate of clearing.

### A.5.4 Determining the End of Treatment

Laser therapy may be conducted over multiple treatment sessions. Determining the end of treatment is left to the physician's judgment. The factors involved in this decision relate to the clearance (or lightening) of the tattoo and the restoration of normal skin color and texture. Often the decision to end treatment is arrived at jointly between the physician and the patient (or parents or guardians, as applicable). Treatment should cease when the tattoo is completely cleared or no further progress is being obtained. Poor patient compliance with post-treatment protocol, which could jeopardize the results of treatment, should also be considered a reason for ending treatment.

### A.5.5 Adverse Effects

---

**WARNING**

**TREATING THE TATTOO WITH EXCESSIVE ENERGY LEVELS MAY RESULT IN ADVERSE EFFECTS SUCH AS SCARRING (HYPERTROPHIC AND/OR ATROPHIC) AND/OR HYPO- OR HYPERPIGMENTATION. CARE MUST BE TAKEN WHEN CHOOSING THE ENERGY DENSITY FOR TREATMENT. EACH LASER PULSE SHOULD ONLY BE DELIVERED WITHIN THE TATTOO AREA.**

---

Treating the tattoo with excessive energy levels can result in adverse effects such as hypertrophic or atrophic scarring and/or hypo- or hyperpigmentation. Patients with darker skin types (≥IV), or who are deeply tanned, may be more susceptible to hypopigmentation at effective treatment dosages.

## A.6 POST TREATMENT CARE

### A.6.1 General

Care should be taken to prevent trauma to the treated area for the first 4 or 5 days following treatment. An antibacterial ointment may be applied to the treated area immediately following treatment and a gauze bandage placed over it. Use of the ointment and a bandage in the first few days following laser treatment may be beneficial.

The use of sunblock (#15 or greater) on a regular basis may also prove helpful.

### A.6.2 Makeup

The use of makeup during the first 4 or 5 days after treatment is not recommended. Some physicians tell their patients to cover the treated area with a dressing to reduce the risk of trauma and infection during the first 4 or 5 days following treatment.

### A.6.3 Other Recommendations

The patient should **not** participate in any rough physical activities (playing football or ice hockey, etc.) for 10 days after treatment. If the patient is likely to expose the treatment area to dirt, it is recommended that the treated area be covered by a dressing for 10 days following laser treatment.

# APPENDIX B

## REFERENCE LITERATURE

1. Anderson RR and Parrish JA; "Selective Photothermolysis: Precise Microsurgery by Selective Absorption of Pulsed Radiation". Science, 29 April 1983, Volume 220, pp. 524-527.

2. Margolis RJ, Dover JS, Polla LL, et al; "Visible Action Spectrum for Melanin-specific Selective Photothermolysis". Lasers Surg Med 1989, 9:389-97

3. Fitzpatrick RE, Goldman MP, Ruiz-Esparaza J; "Use of the alexandrite laser (755 nm, 100 nsec) for tattoo pigment removal in animal model". Journal of the American Academy of Dermatology, Vol 28 (1993), Number 5, Part 1, pp. 745-750.

4. Goldman, Mitchel P. and Fitzpatrick, Richard E. CUTANEOUS LASER SURGERY, The Art and Science of Selective Photothermolysis, Mosby-Year Book, Inc., St. Louis, 1994.

# APPENDIX C

## START-UP CHECKLIST

This is a checklist only and not a substitute for the Operator's Manual or proper training. Review the ALEX*LAZR* Operator's Manual before using the laser. The laser should be used only by personnel trained in its operation and use.

1. Cover windows with an opaque material to prevent unintended viewing.

2. Post laser warning signs near each entrance to the laser suite.

3. Ensure an adequate number of protective eyewear is available. Proper eyewear will filter light at a wavelength of 755 nm with an O.D. of 7 or greater.

4. Connect the trigger switch air line to the trigger switch connector located on the upper right of the rear panel. Ensure that the air line is not kinked or pinched and that the laser wheels are not on it. Lock the laser's wheels (See Section 2.3).

5. Plug the laser into the correct electrical outlet. Ensure that the main circuit breaker on the lower rear panel is in the "ON" position.

6. Start the laser by turning the key to the "S" or start position and release. The system will now enter the warm-up (approx. 10 min.). After the warm-up the system will then enter the STANDBY state.

7. Select the desired spot size. Ensure that the spot size on the attached handpiece matches the handpiece size displayed in the HANDPIECE field on the control panel. Failure to do so can result in the delivery of improper energy to the patient.

8. Select the energy density by using the up or down arrows in ENERGY field on the control panel.

9. Calibrate the laser energy to be delivered to the patient:

Note

The system only performs a calibration if required. A calibration is required 1) when the laser is turned on, 2) the ENERGY field was changed, 3) the HANDPIECE field was changed, 4) after specific warnings or faults, and 5) if in STANDBY for more than 30 minutes.

A calibration can be forced by changing the ENERGY field one setting lower (or higher), and then putting the ENERGY field back to its original setting.

a. Remove the distance gauge if attached. Insert the handpiece into the CAL port.

b. Place the laser into READY.

c. Hold down the footswitch continually until the display reads *CAL OK* RELEASE TRIGGER SWITCH.

10. Select the rate by using the up or down arrows in the RATE field on the control panel.

11. Perform treatment. Place the laser into STANDBY after use. Document laser use.

- To return the pulse count to zero, press the PULSE COUNT RESET button on the control panel.
- When changing spot size ensure that the spot size on the attached handpiece matches the handpiece size displayed in the HANDPIECE field on the control panel.

# APPENDIX D

## ACCESSORY LIST

| *Candela Part Number* | *Description* |
|---|---|
| 7120-00-0290 | Footswitch assembly |
| 7120-00-9380 | Fiber assembly |
| 7121-00-3310 | 2 mm Handpiece |
| 7121-00-3320 | 3 mm Handpiece |
| 7121-00-3330 | 4 mm Handpiece |
| 7040-00-6350 | Patient protective eyewear |
| 8095-00-0120 | Protective eyewear, goggles |
| 8095-00-0110 | Protective eyewear, spectacles |
| 1301-00-5023 | Handpiece prong |
| 7121-00-4740 | Laser warning sign |
| 8501-00-0990 | Operator's Manual |